ECE285 Electric Circuits I
Fall 2022 Nathalia Peixoto

MIDTERM EXAM 2

November 1st, 2022. 12 to 1:15 pm

Honor pledge: "On my honor I have neither given nor received aid on this exam."
Name: daksh khandelwal **Signature:**

- Calculators, books, notes, and cell phones not allowed.
- **Answer questions 1 through 5 on this page.**
- Please do not take the staple off (15 pts off).

Question (points)	**Answers for 1 through 5**
1 (5)	30
2 (5)	$V_{-in} < 0\,V$
3 (5)	$V_{in} = -2\,V$
4 (5)	$\lvert I_n \rvert = 0.5\,mA$
5 (5)	$R_{MN} = 3.67\,K$
6 (10)	(TEC)
7 (15)	(circuit design)
8 (15)	(circuit analysis)
9 (20)	(cascade opamp circuit analysis)
10 (15)	(TEC/NEC)

Enter your answers to questions 1 to 5 on page 1, not here. Use this space as you wish – this page will not be graded.

1. A circuit has 100 meshes, 90 nodes, 10 independent voltage supplies, 15 dependent voltage supplies, 20 independent current supplies, and 25 dependent current supplies. How many circuits will need to be solved if someone is trying to solve it using superposition? 30 circuits
2. If a comparator has power supplies at +15V and -15V, the positive input is connected to ground, and the output is 15V, write a possible voltage (a number or a set of numbers) that could be connected to the negative input to guarantee that output. $V_{-in} < 0\ V$
3. What is the input to a non-inverting amplifier if the output is -12V and Ri=2 kΩ and Rf=10 kΩ?
4. What is the absolute value for the Norton current (between C and D) in figure 1?
5. What is the equivalent resistance between nodes M and N?

$-12 = V_{in}\left(1+\frac{10k}{2k}\right)$

$(1+5)$

$-12 = V_{in}\,6$

$V_{in} = -2$

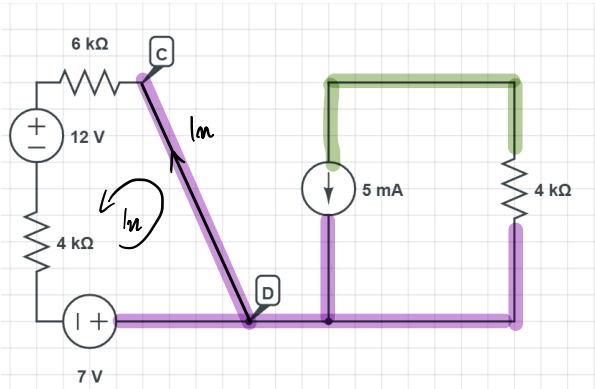

Figure 1. NEC

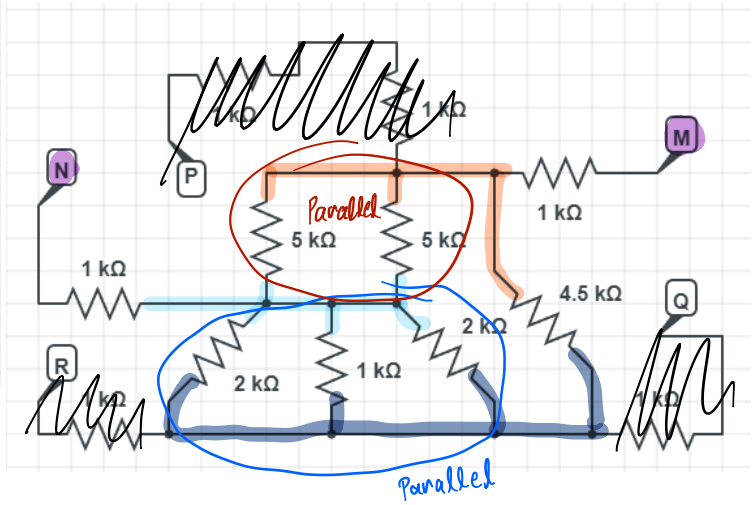

Figure 2. Equivalent resistance

$1K \parallel 1K = 0.5K$

I_n

$6K I_n + 12 + 4K I_n - 7 = 0$

$10K I_n = -5$

$I_n = -0.5\ mA$

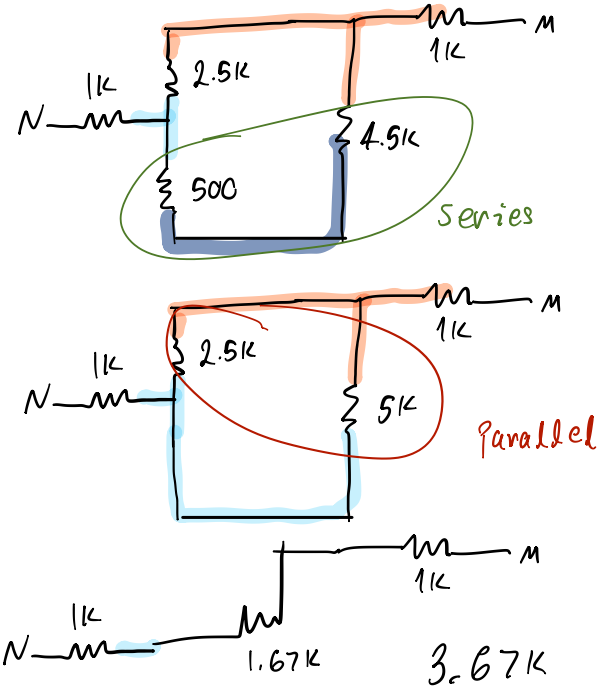

$\frac{1}{\frac{1}{2.5}+\frac{1}{5}} = \frac{1}{\frac{3}{5}}$

$\frac{5}{3}k$

$1.67K$

6. Find the TEC for the circuit below between terminals a and b. (10 pts)

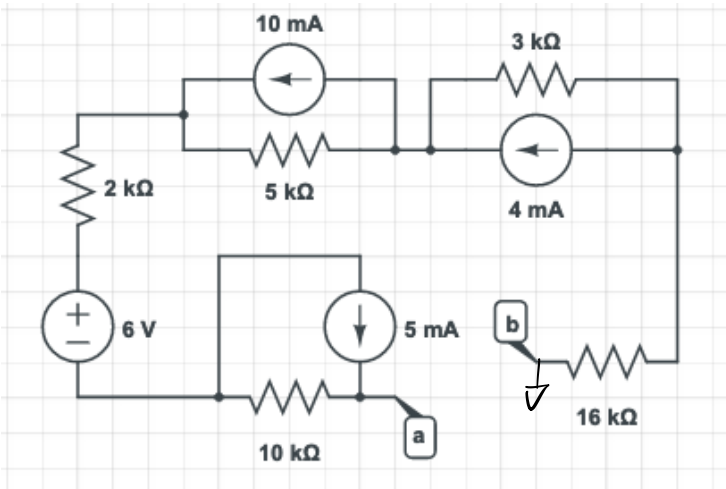

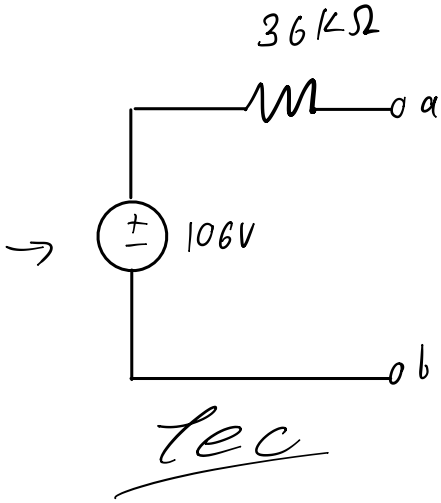

R_{th}: Turn off Independent Source

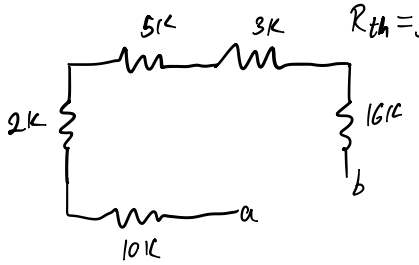

$R_{th} = 36K\Omega$

$V_{th} = V_{ab} = V_a$:

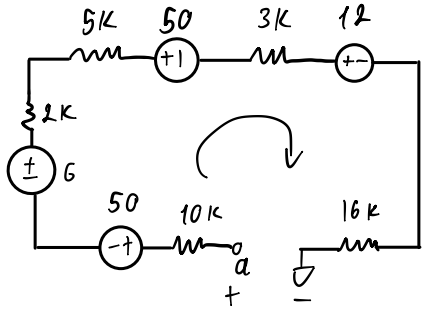

KVL:

$50 - 6 + 50 + 12 = 106\ V = V_a = V_{th}$

7. Assume you own several operational amplifiers and only resistors of values 10, 100, 1 k Ω, 10 k Ω, and 100k Ω. Design a circuit that implements the function

f(x,y,z,t,u)= 2x+0.5y+100t-3z-10u (V)

x, y, z, t, and u are time-varying signals (you are not allowed to use "-x", or any other inverted signal). The output needs to be between -17 and 20V. (15 pts)

$$f = -(-(2x + 0.5y + 100t)) - 3z - 10u$$

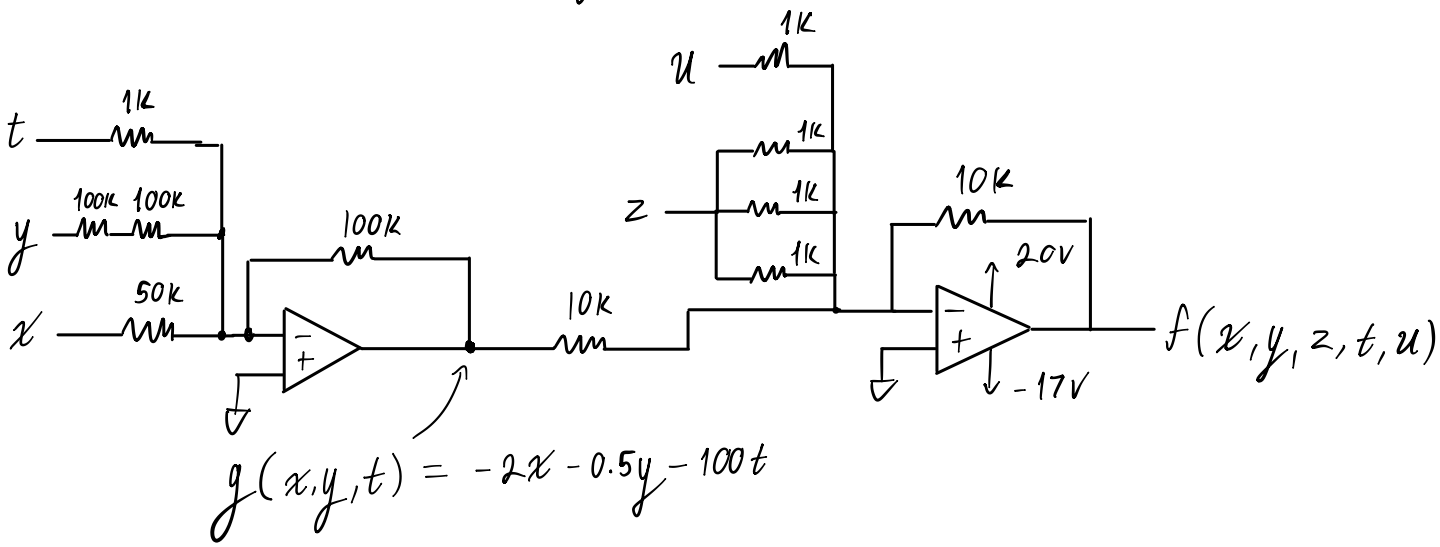

8. Consider the circuit below. Assume the opamp is powered by -30V and +30V. Find Va, Vb, Vc, Vd, and Ve. Your solution to the problem will be graded. Write which electric circuit methods you are using (e.g. Ohm's law, superposition, KCL, KVL, nodal, etc). This is not a traditional opamp configuration. (15 pts)

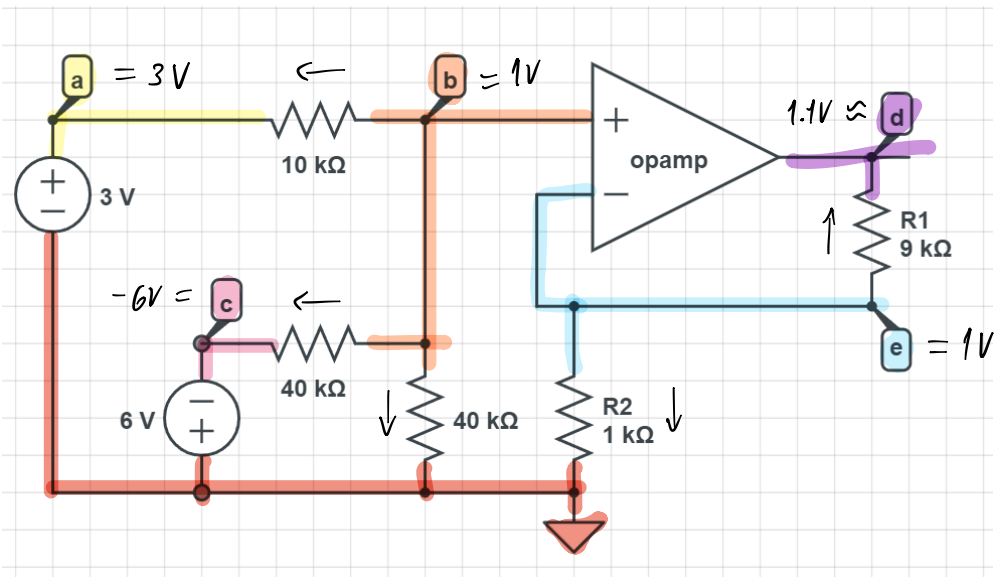

$V_b = V_e$

$V_p = V_n$

Make sure to find

$V_b = V_e = V_p = V_n$

Nodal:

$$\frac{V_b - 3}{10k} + \frac{V_b + 6}{40k} + \frac{V_b}{40k} = 0$$

$\times 40k$

$$4V_b - 12 + V_b + 6 + V_b = 0$$

$$6V_b = 6$$

$$V_b = 1V$$

$$\Rightarrow V_e = 1V$$

$$\frac{1}{1k} + \frac{1 - V_d}{9k} = 0$$

$\times 9k$

$$9 + 1 - 9V_d = 0$$

$$V_d = \frac{10}{9} \approx 1.1\ V$$

9. Consider the circuit below, and assume all opamps, unless otherwise specified, are powered by +15 V and -15 V (Vcc and -Vcc, respectively). Each opamp has a letter (A, B, C, etc). Indicate which configuration they are connected in. If you enter A under "comparator", do NOT enter A in any other configuration. One configuration may have more than one letter (for example, A and B may be configured as inverting amplifiers) but each letter may only be used once. (10 pts).

inverting amplifiers: C

summing amplifiers: B

voltage followers/buffers: A

non-inverting amplifiers: F

comparators: E

difference amplifiers: D

Write the output voltage of each opamp at **t=200ms** (10 pts)

$f=2 \quad T = 0.5s = 500ms$

$V(200) = 1V$

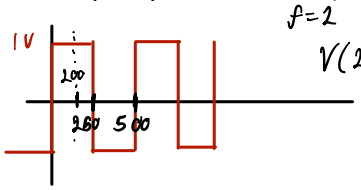

VD= -10

VG= -3 V

VA= -3 V

VC= 6 V

VH= 6V

VF= 15 V

VE= 5V

VB= -12.5 V

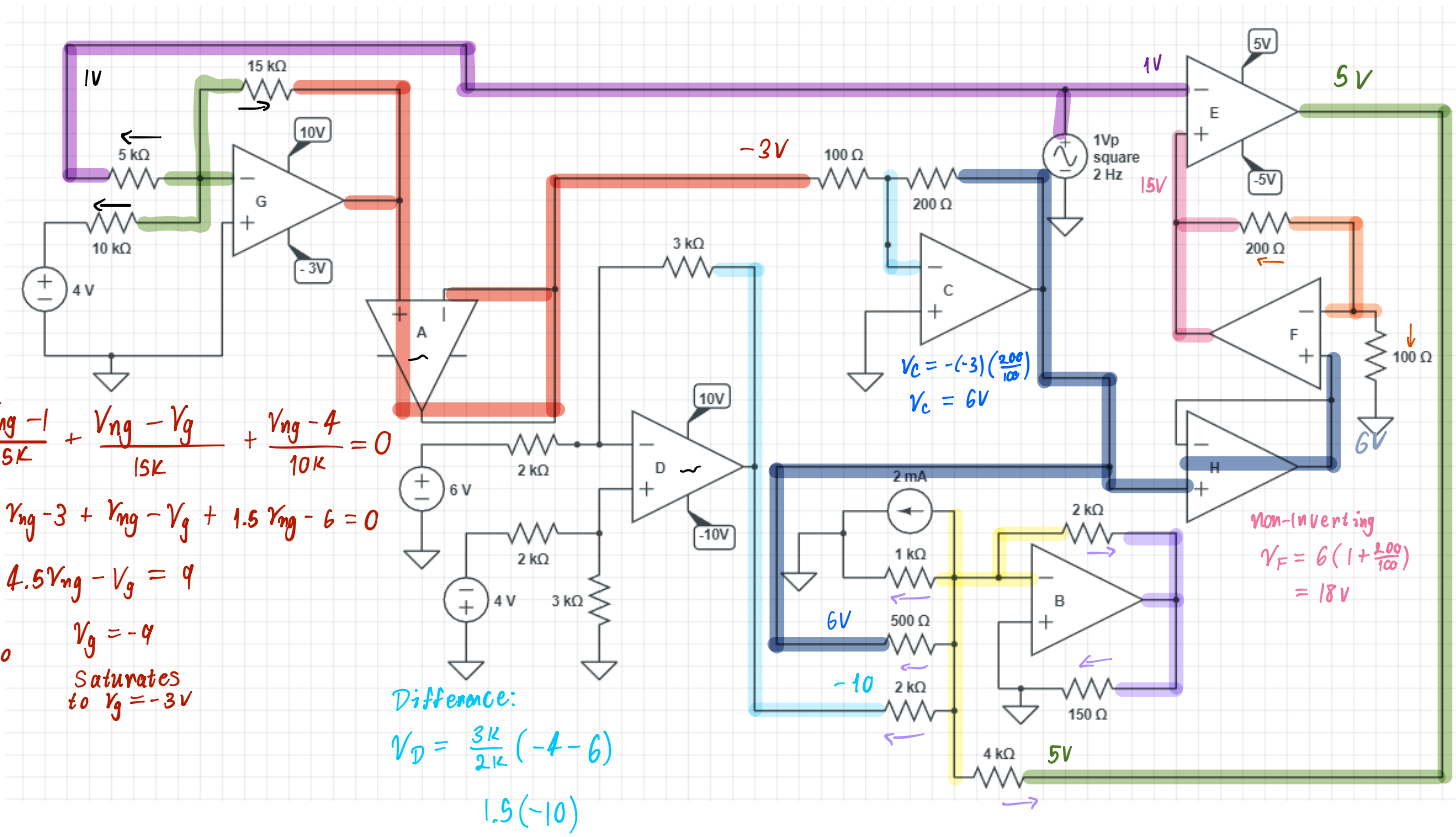

$\frac{V_{ng}-1}{5K} + \frac{V_{ng}-V_g}{15K} + \frac{V_{ng}-4}{10K} = 0$

$\times 15K$

$V_{ng} - 3 + V_{ng} - V_g + 1.5V_{ng} - 6 = 0$

$4.5V_{ng} - V_g = 9$

$V_{pg} = 0$
$\Rightarrow V_{ng} = 0$

$V_g = -9$

Saturates to $V_g = -3V$

$V_c = -(-3)\left(\frac{200}{100}\right)$

$V_c = 6V$

non-inverting

$V_F = 6\left(1+\frac{200}{100}\right)$

$= 18V$

Difference:

$V_D = \frac{3K}{2K}(-4-6)$

$1.5(-10)$

$V_D = -15V$

Saturates to -10

$\frac{V_{nB}-V_B}{2K} + \frac{V_{nB}}{1K} + \frac{V_{nB}-6}{0.5K} + \frac{V_{nB}+10}{2K} + \frac{V_{nB}-5}{4K} + 2mA = 0$

$\times 4K$

$2V_{nB} - 2V_B + 4V_{nB} + 8V_{nB} - 48 + 2V_{nB} + 20 + V_{nB} - 5 + 8 = 0$

$17V_{nB} - 2V_B = 25$

$V_{pB} = 0$
$\rightarrow V_{nB} = 0$ $\Rightarrow$ $V_B = -12.5V$

10. Find the Norton equivalent **resistance** between nodes a and b. There is no load shown in this circuit. Indicate which circuit analysis method you are using (for partial credit). You need to use the **test source** method. (15 pts).

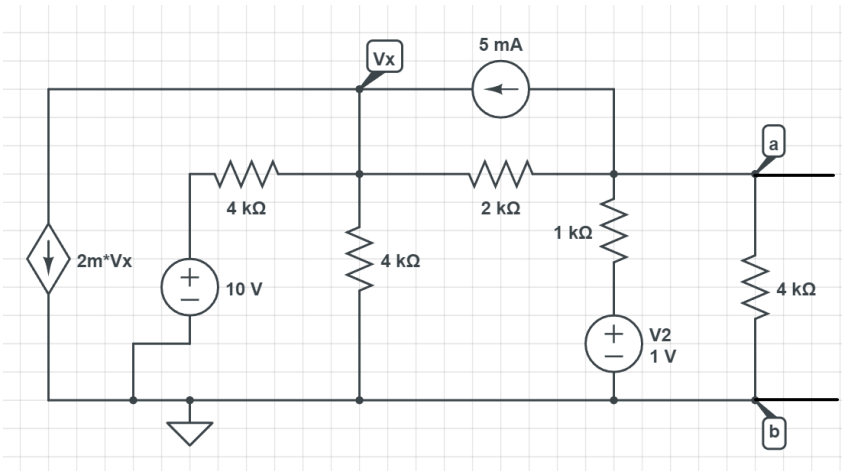

R_N :

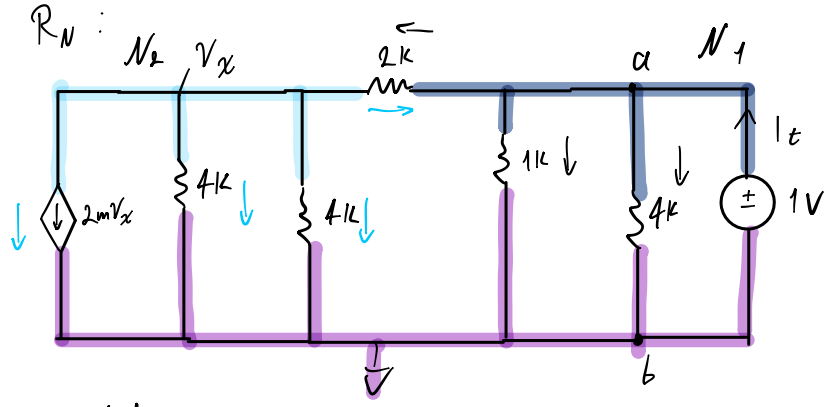

Nodal

Node 1:

$$I_t = \frac{1}{4K} + \frac{1}{1K} + \frac{1 - V_x}{2K}$$

$4K$ $\quad 4K\, I_t = 1 + 4 + 2 - 2V_x$

$$7 - 2V_x = 4K\, I_t$$

Node 2:

$$2mV_x + 2\frac{V_x}{4K} + \frac{V_x - 1}{2K} = 0$$

$\times 4K$ $\quad 8V_x + 2V_x + 2V_x - 2 = 0$

$$12V_x = 2$$

$$V_x = \frac{1}{6}$$

$$7 - \frac{1}{3} = 4K\, I_t$$

$$\frac{20}{3} = 4K\, I_t$$

$$\frac{20}{12K} = I_t$$

$$I_t = \frac{5}{3K}\ A$$

$$R_N = \frac{1}{I_t} = \frac{3K}{5} = 600\ \Omega$$

$$\begin{array}{r} 600 \\ 5\overline{)3000} \end{array}$$